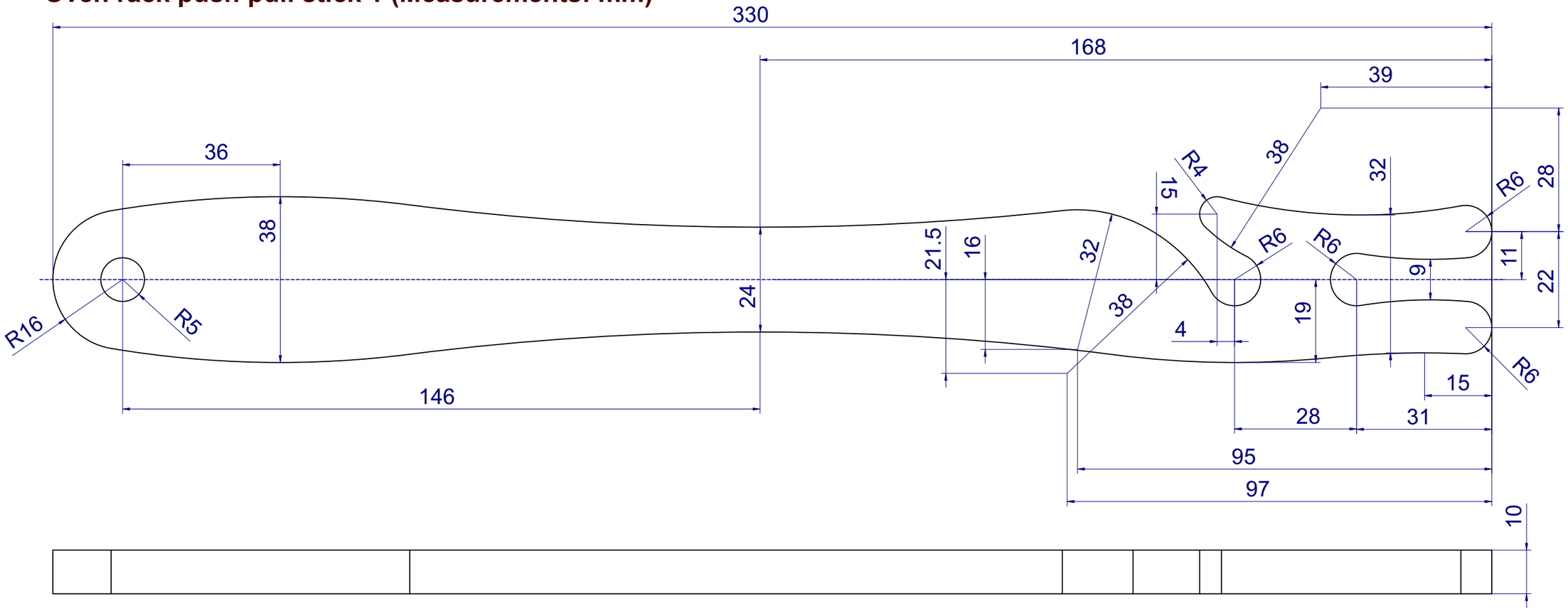Oven rack push pull stick 1 (Measurements: mm)