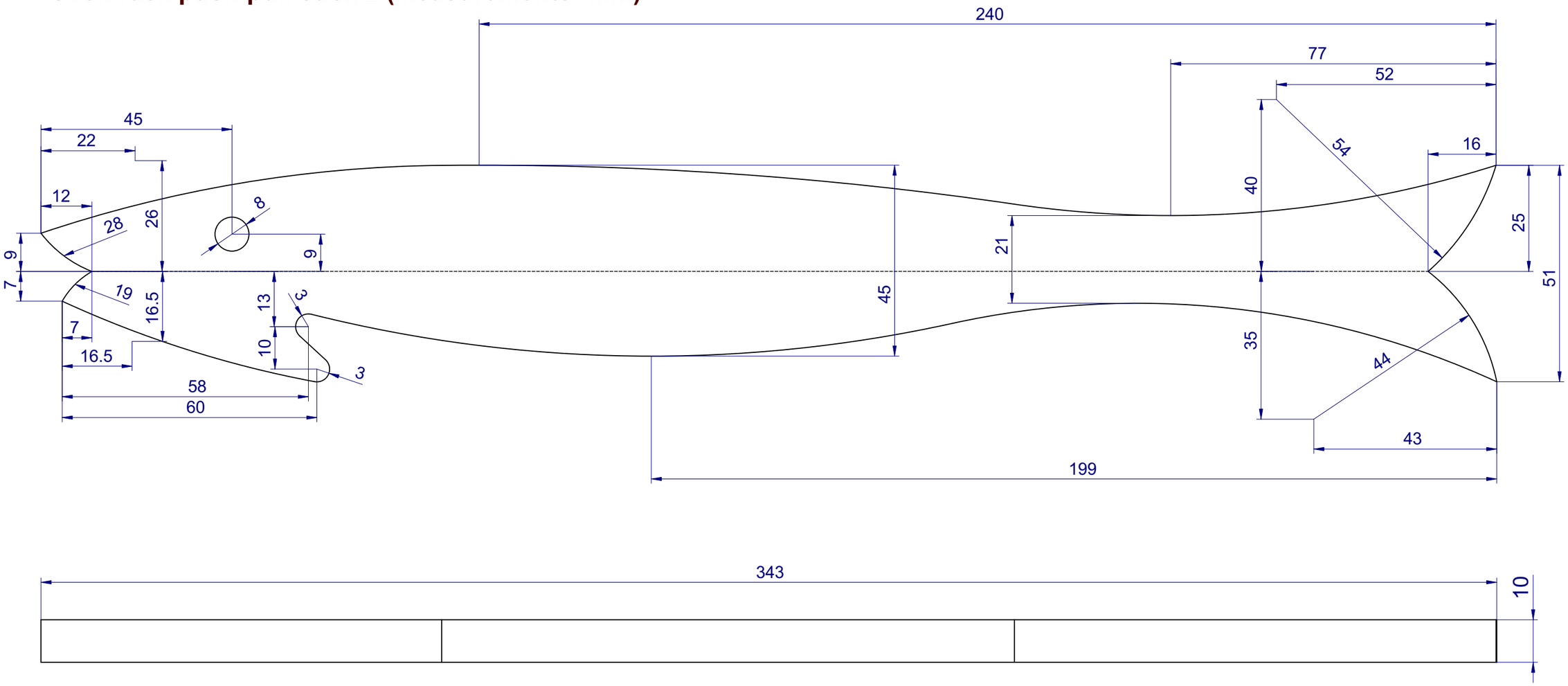Oven rack push pull stick 2 (Measurements: mm)